# Bearing unit UCFC215 D1 NTN

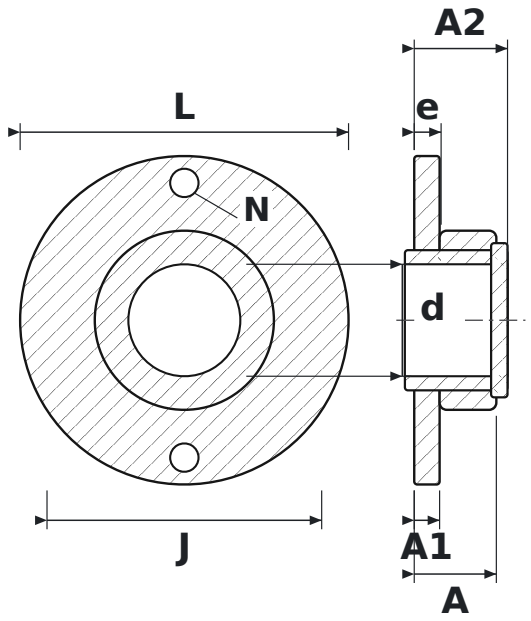


## DIMENSIONS

| | | |
|---|---|---|
| **d** | shaft diameter | **75 mm** |
| **L** | housing length | **220 mm** |
| **J** | bolt hole spacing | **184 mm** |
| **N** | bolt hole diameter | **19 mm** |
| **A** | overall housing width (from mounting face) | **55 mm** |
| **A1** | flange thickness | **17 mm** |
| **A2** | overall length incl. protruding inner ring | **62.5 mm** |
| **e** | mounting face to bearing centre | **18 mm** |

## SPECIFICATIONS

| | |
|---|---|
| Manufacturer | **NTN** |
| Manufacturer designation | **UCFC215 D1** |
| Rolling elements | **single-row ball bearing** |
| Mass | **7.81 kg** |