Bearing unit UCFC215 NKE

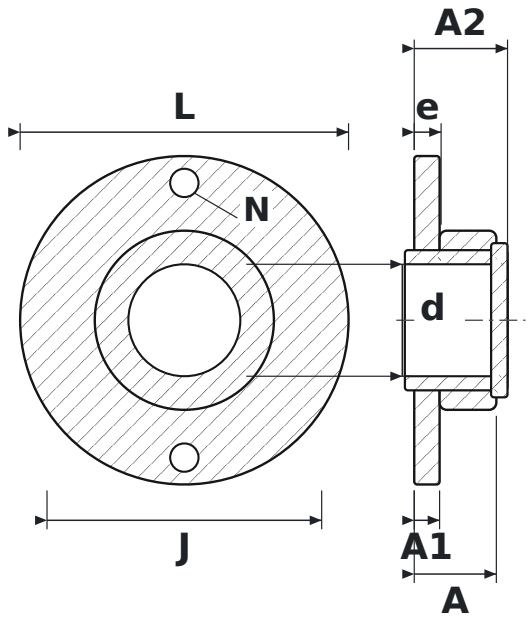

DIMENSIONS

d	shaft diameter	**75 mm**
L	housing length	**220 mm**
J	bolt hole spacing	**184 mm**
N	bolt hole diameter	**19 mm**
A	overall housing width (from mounting face)	**55 mm**
A1	flange thickness	**17 mm**
A2	overall length incl. protruding inner ring	**62.5 mm**
e	mounting face to bearing centre	**18 mm**

SPECIFICATIONS

Manufacturer	**NKE**
Manufacturer designation	**UCFC215**
Rolling elements	**single-row ball bearing**