# Bearing unit UCFC216 NKE

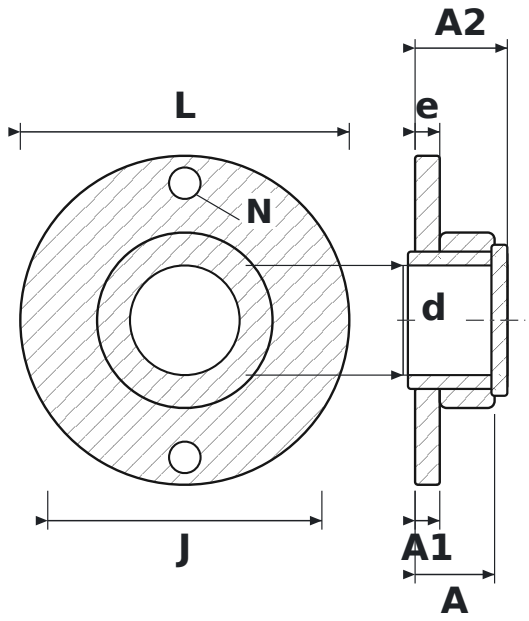


## DIMENSIONS

| | | |
|---|---|---|
| **d** | shaft diameter | **80 mm** |
| **L** | housing length | **240 mm** |
| **J** | bolt hole spacing | **200 mm** |
| **N** | bolt hole diameter | **23 mm** |
| **A** | overall housing width (from mounting face) | **58 mm** |
| **A1** | flange thickness | **18 mm** |
| **A2** | overall length incl. protruding inner ring | **67.3 mm** |
| **e** | mounting face to bearing centre | **18 mm** |

## SPECIFICATIONS

| | |
|---|---|
| Manufacturer | **NKE** |
| Manufacturer designation | **UCFC216** |
| Rolling elements | **single-row ball bearing** |