CASTOMER

DATASHEET

Bearing unit UCFL205 ZEN

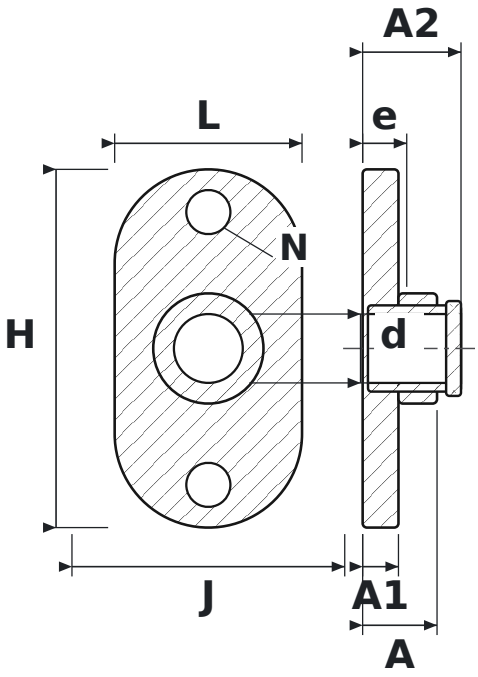

DIMENSIONS

d	shaft diameter	**25 mm**
L	housing length	**68 mm**
H	housing height	**130 mm**
J	bolt hole spacing	**99 mm**
N	bolt hole diameter	**16 mm**
A	overall housing width (from mounting face)	**27 mm**
A1	flange thickness	**13 mm**
A2	overall length incl. protruding inner ring	**35.7 mm**
e	mounting face to bearing centre	**16 mm**

SPECIFICATIONS

Manufacturer	**ZEN**
Manufacturer designation	**UCFL205**
Rolling elements	**single-row ball bearing**