Bearing unit UCFL208-108 D1 NSK

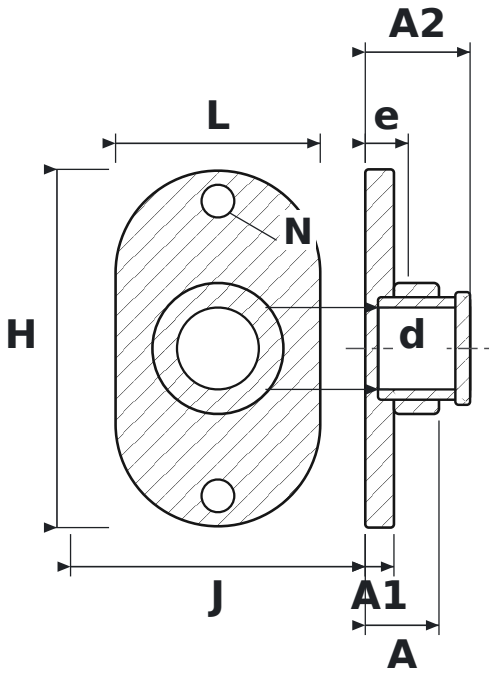

DIMENSIONS

d	shaft diameter	**40 mm**
L	housing length	**100 mm**
H	housing height	**175 mm**
J	bolt hole spacing	**144 mm**
N	bolt hole diameter	**16 mm**
A	overall housing width (from mounting face)	**36 mm**
A1	flange thickness	**14 mm**
A2	overall length incl. protruding inner ring	**51.2 mm**
e	mounting face to bearing centre	**21 mm**

SPECIFICATIONS

Manufacturer	**NSK**
Manufacturer designation	**UCFL208-108 D1**
Rolling elements	**single-row ball bearing**