Bearing unit UCFL213 D1 RHP

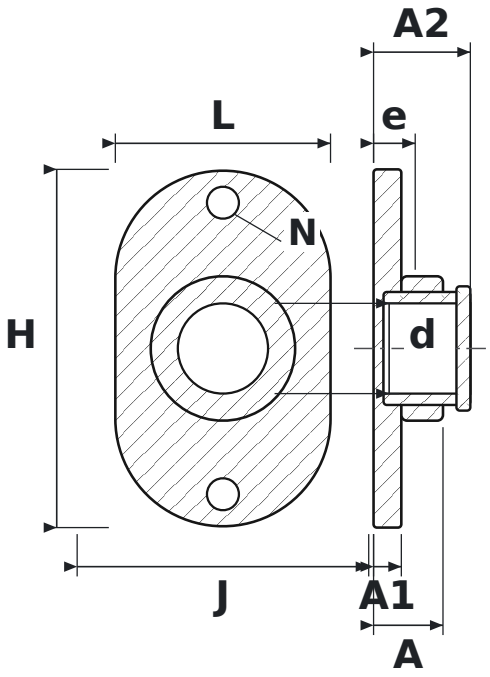

DIMENSIONS

d	shaft diameter	**65 mm**
L	housing length	**155 mm**
H	housing height	**258 mm**
J	bolt hole spacing	**210 mm**
N	bolt hole diameter	**23 mm**
A	overall housing width (from mounting face)	**50 mm**
A1	flange thickness	**20 mm**
A2	overall length incl. protruding inner ring	**69.7 mm**
e	mounting face to bearing centre	**30 mm**

SPECIFICATIONS

Manufacturer	**RHP**
Manufacturer designation	**UCFL213 D1**
Rolling elements	**single-row ball bearing**