Bearing unit UCFL214 SNR

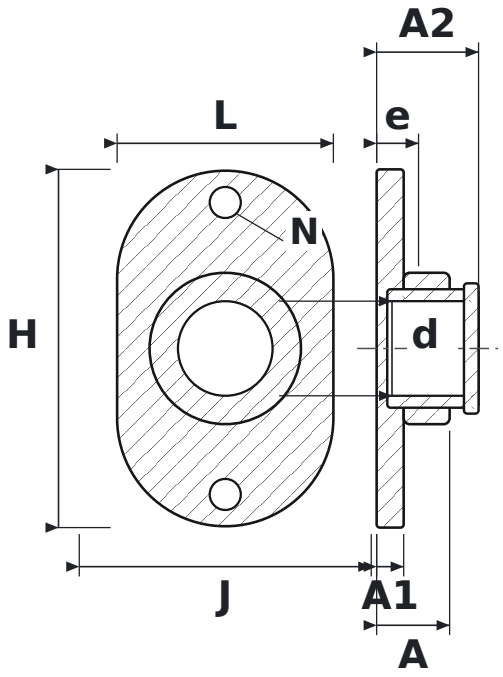

DIMENSIONS

d	shaft diameter	**70 mm**
L	housing length	**160 mm**
H	housing height	**265 mm**
J	bolt hole spacing	**216 mm**
N	bolt hole diameter	**23 mm**
A	overall housing width (from mounting face)	**54 mm**
A1	flange thickness	**20 mm**
A2	overall length incl. protruding inner ring	**75.4 mm**
e	mounting face to bearing centre	**31 mm**

SPECIFICATIONS

Manufacturer	**SNR**
Manufacturer designation	**UCFL214**
Rolling elements	**single-row ball bearing**