Bearing unit UCFL215 SKF

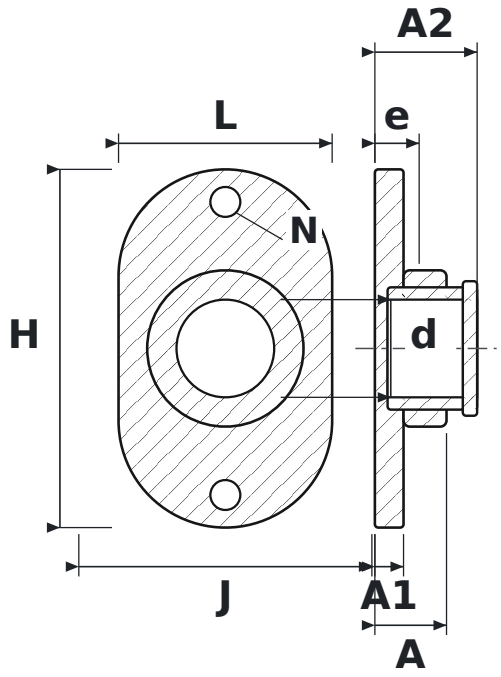

DIMENSIONS

d	shaft diameter	**75 mm**
L	housing length	**164 mm**
H	housing height	**275 mm**
J	bolt hole spacing	**225 mm**
N	bolt hole diameter	**23 mm**
A	overall housing width (from mounting face)	**55 mm**
A1	flange thickness	**22 mm**
A2	overall length incl. protruding inner ring	**78.5 mm**
e	mounting face to bearing centre	**34 mm**

SPECIFICATIONS

Manufacturer	**SKF**
Manufacturer designation	**UCFL215**
Rolling elements	**single-row ball bearing**