Bearing unit UCFL216 D1 RHP

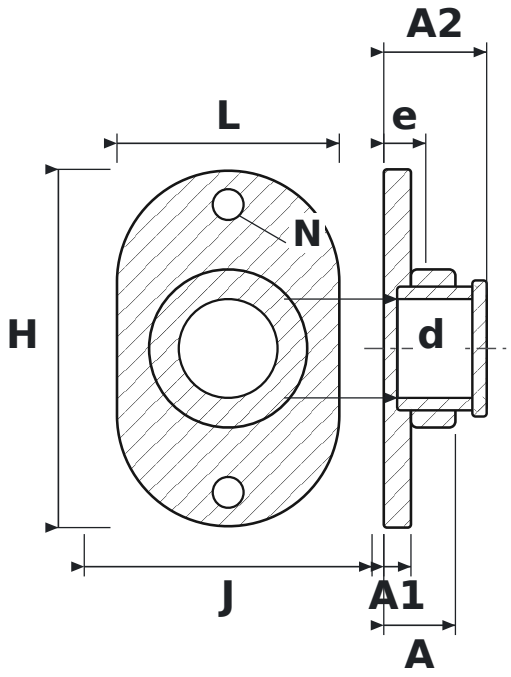

DIMENSIONS

d	shaft diameter	**80 mm**
L	housing length	**180 mm**
H	housing height	**290 mm**
J	bolt hole spacing	**233 mm**
N	bolt hole diameter	**25 mm**
A	overall housing width (from mounting face)	**58 mm**
A1	flange thickness	**22 mm**
A2	overall length incl. protruding inner ring	**83.3 mm**
e	mounting face to bearing centre	**34 mm**

SPECIFICATIONS

Manufacturer	**RHP**
Manufacturer designation	**UCFL216 D1**
Rolling elements	**single-row ball bearing**