Bearing unit UCFL217 FYH

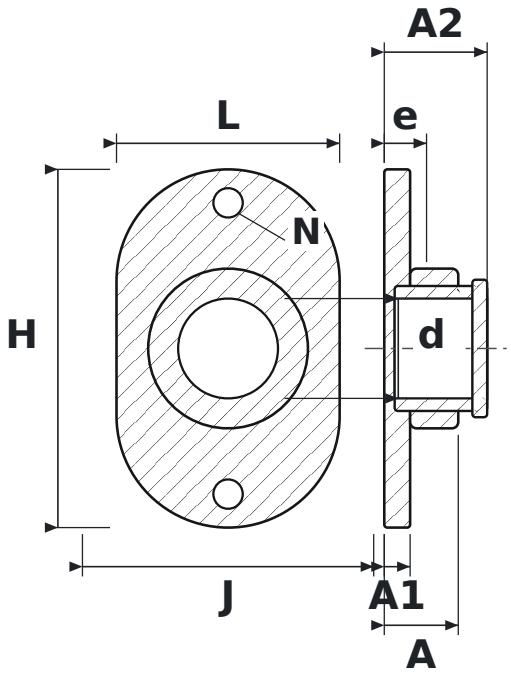

DIMENSIONS

d	shaft diameter	**85 mm**
L	housing length	**190 mm**
H	housing height	**305 mm**
J	bolt hole spacing	**248 mm**
N	bolt hole diameter	**25 mm**
A	overall housing width (from mounting face)	**63 mm**
A1	flange thickness	**22 mm**
A2	overall length incl. protruding inner ring	**87.6 mm**
e	mounting face to bearing centre	**36 mm**

SPECIFICATIONS

Manufacturer	**FYH**
Manufacturer designation	**UCFL217**
Rolling elements	**single-row ball bearing**