Bearing unit UCFL218 SNR

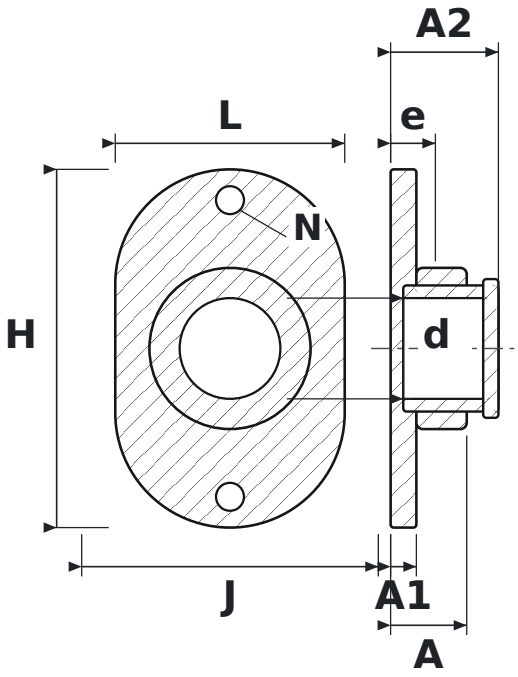

DIMENSIONS

d	shaft diameter	**90 mm**
L	housing length	**205 mm**
H	housing height	**320 mm**
J	bolt hole spacing	**265 mm**
N	bolt hole diameter	**25 mm**
A	overall housing width (from mounting face)	**68 mm**
A1	flange thickness	**23 mm**
A2	overall length incl. protruding inner ring	**96.3 mm**
e	mounting face to bearing centre	**40 mm**

SPECIFICATIONS

Manufacturer	**SNR**
Manufacturer designation	**UCFL218**
Rolling elements	**single-row ball bearing**
Mass	**10.622 kg**