Bearing unit UCFL305 FYH

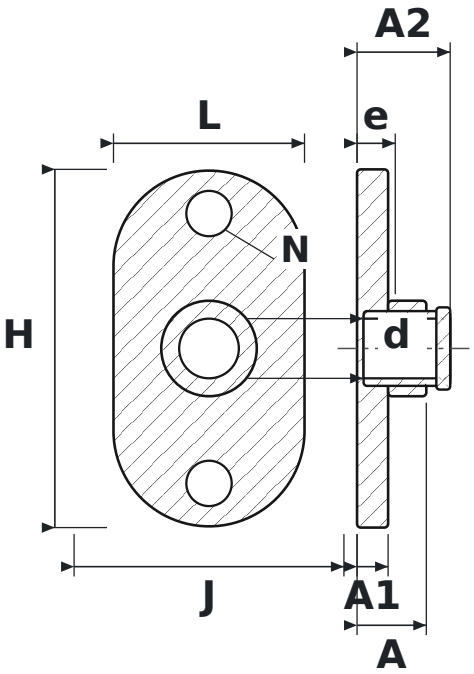

DIMENSIONS

d	shaft diameter	**25 mm**
L	housing length	**80 mm**
H	housing height	**150 mm**
J	bolt hole spacing	**113 mm**
N	bolt hole diameter	**19 mm**
A	overall housing width (from mounting face)	**29 mm**
A1	flange thickness	**13 mm**
A2	overall length incl. protruding inner ring	**39 mm**
e	mounting face to bearing centre	**16 mm**

SPECIFICATIONS

Manufacturer	**FYH**
Manufacturer designation	**UCFL305**
Rolling elements	**single-row ball bearing**