Bearing unit UCFL309 TIMKEN

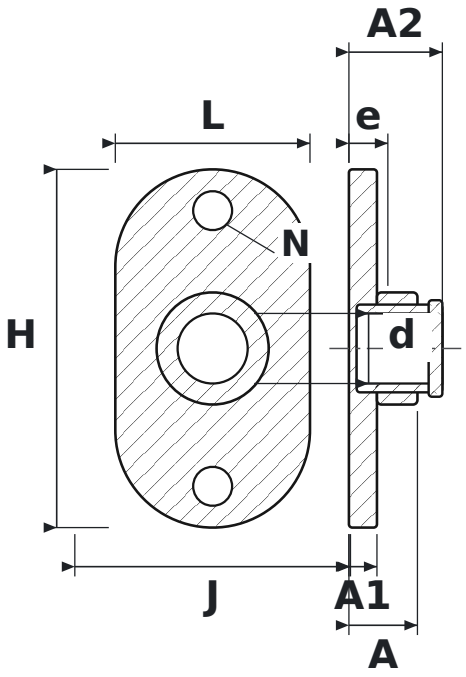

DIMENSIONS

d	shaft diameter	**45 mm**
L	housing length	**125 mm**
H	housing height	**230 mm**
J	bolt hole spacing	**177 mm**
N	bolt hole diameter	**25 mm**
A	overall housing width (from mounting face)	**44 mm**
A1	flange thickness	**18 mm**
A2	overall length incl. protruding inner ring	**60 mm**
e	mounting face to bearing centre	**25 mm**

SPECIFICATIONS

Manufacturer	**TIMKEN**
Manufacturer designation	**UCFL309**
Rolling elements	**single-row ball bearing**