Bearing unit UCFL311 J KOYO

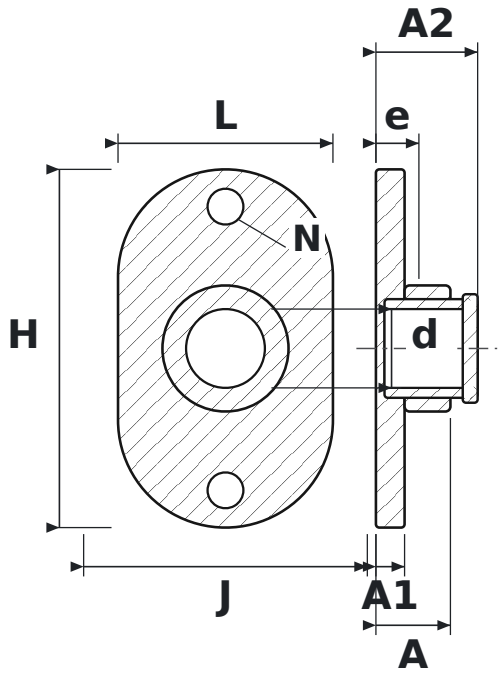

DIMENSIONS

d	shaft diameter	**55 mm**
L	housing length	**150 mm**
H	housing height	**250 mm**
J	bolt hole spacing	**198 mm**
N	bolt hole diameter	**25 mm**
A	overall housing width (from mounting face)	**52 mm**
A1	flange thickness	**20 mm**
A2	overall length incl. protruding inner ring	**71 mm**
e	mounting face to bearing centre	**30 mm**

SPECIFICATIONS

Manufacturer	**KOYO**
Manufacturer designation	**UCFL311 J**
Rolling elements	**single-row ball bearing**