Bearing unit UCFL312 FYH

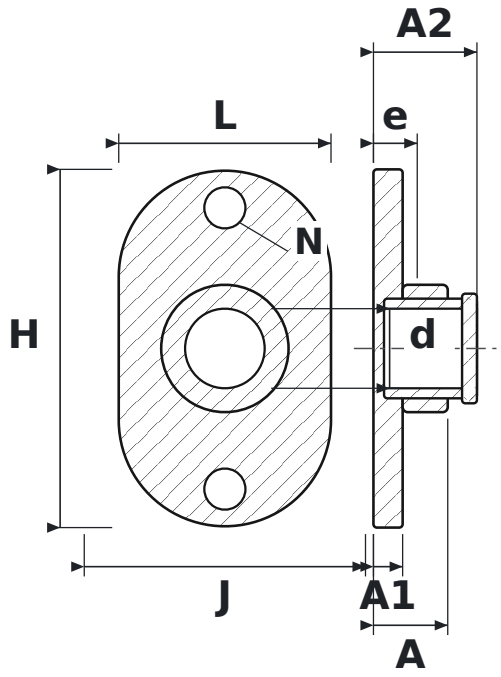

DIMENSIONS

d	shaft diameter	**60 mm**
L	housing length	**160 mm**
H	housing height	**270 mm**
J	bolt hole spacing	**212 mm**
N	bolt hole diameter	**31 mm**
A	overall housing width (from mounting face)	**56 mm**
A1	flange thickness	**22 mm**
A2	overall length incl. protruding inner ring	**78 mm**
e	mounting face to bearing centre	**33 mm**

SPECIFICATIONS

Manufacturer	**FYH**
Manufacturer designation	**UCFL312**
Rolling elements	**single-row ball bearing**