Bearing unit UCFS305 NSK

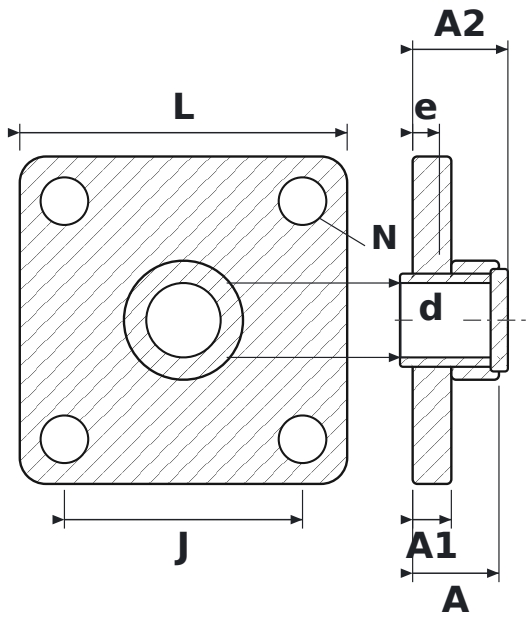

DIMENSIONS

d	shaft diameter	**25 mm**
L	housing length	**110 mm**
J	bolt hole spacing	**80 mm**
N	bolt hole diameter	**16 mm**
A	overall housing width (from mounting face)	**29 mm**
A1	flange thickness	**13 mm**
A2	overall length incl. protruding inner ring	**32 mm**
e	mounting face to bearing centre	**9 mm**

SPECIFICATIONS

Manufacturer	**NSK**
Manufacturer designation	**UCFS305**
Rolling elements	**single-row ball bearing**
Mass	**1.26 kg**