Bearing unit UCFS311 FYH

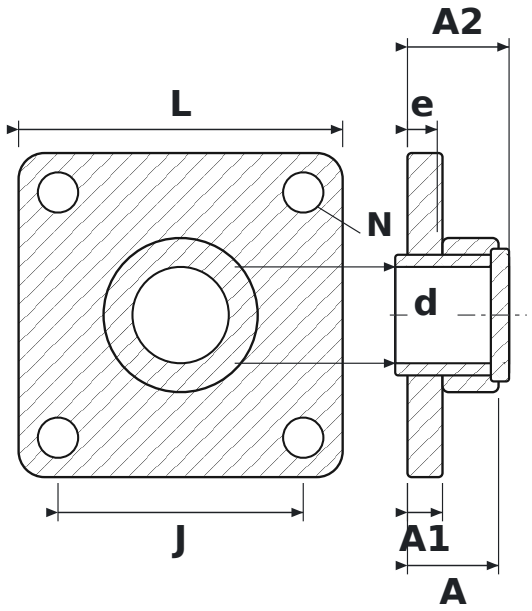

DIMENSIONS

d	shaft diameter	**55 mm**
L	housing length	**185 mm**
J	bolt hole spacing	**140 mm**
N	bolt hole diameter	**23 mm**
A	overall housing width (from mounting face)	**52 mm**
A1	flange thickness	**20 mm**
A2	overall length incl. protruding inner ring	**58 mm**
e	mounting face to bearing centre	**17 mm**

SPECIFICATIONS

Manufacturer	**FYH**
Manufacturer designation	**UCFS311**
Rolling elements	**single-row ball bearing**