Bearing unit UCFS328 SNR

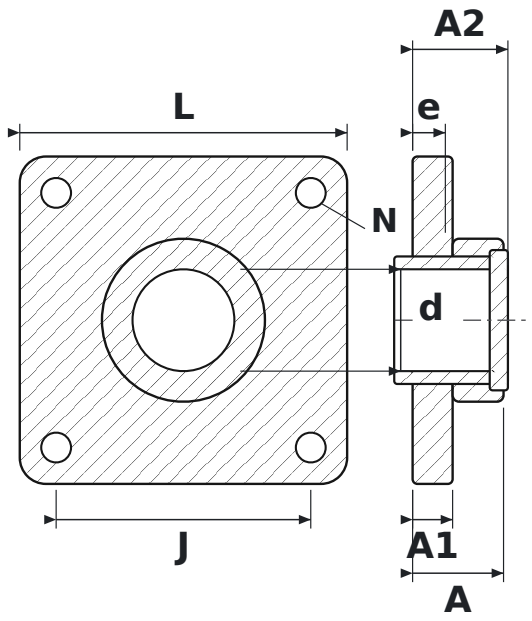

DIMENSIONS

d	shaft diameter	**140 mm**
L	housing length	**450 mm**
J	bolt hole spacing	**350 mm**
N	bolt hole diameter	**41 mm**
A	overall housing width (from mounting face)	**125 mm**
A1	flange thickness	**55 mm**
A2	overall length incl. protruding inner ring	**131 mm**
e	mounting face to bearing centre	**45 mm**

SPECIFICATIONS

Manufacturer	**SNR**
Manufacturer designation	**UCFS328**
Rolling elements	**single-row ball bearing**