# Bearing unit UCP202-10 NKE

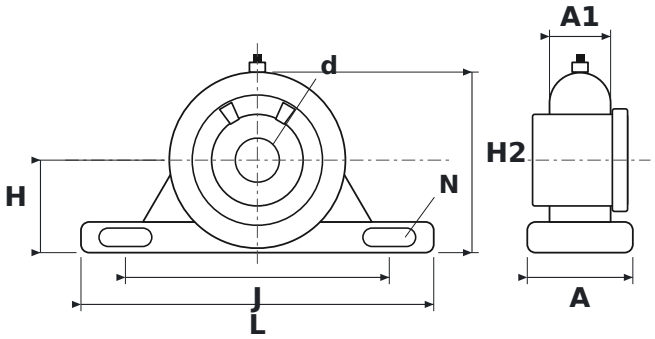


## DIMENSIONS

| | | |
|---|---|---|
| **d** | shaft diameter | **15.88 mm** |
| **L** | housing length | **127 mm** |
| **H** | shaft centre height | **33.3 mm** |
| **H2** | total height | **65 mm** |
| **J** | bolt hole spacing | **95 mm** |
| **N** | bolt hole diameter | **13 mm** |
| **A** | housing width | **38 mm** |
| **A1** | upper housing width (at the bearing) | **22 mm** |

## SPECIFICATIONS

| | |
|---|---|
| Manufacturer | **NKE** |
| Manufacturer designation | **UCP202-10** |
| Rolling elements | **single-row ball bearing** |