Bearing unit UCP203 NKE

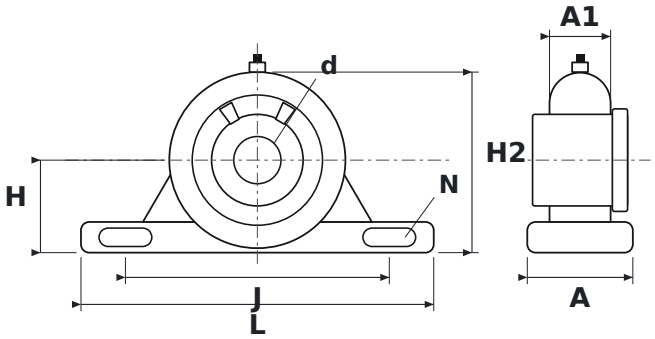

DIMENSIONS

d	shaft diameter	**17 mm**
L	housing length	**127 mm**
H	shaft centre height	**33.3 mm**
H2	total height	**65 mm**
J	bolt hole spacing	**95 mm**
N	bolt hole diameter	**13 mm**
A	housing width	**38 mm**
A1	upper housing width (at the bearing)	**22 mm**

SPECIFICATIONS

Manufacturer	**NKE**
Manufacturer designation	**UCP203**
Rolling elements	**single-row ball bearing**