Bearing unit UCP208 J KOYO

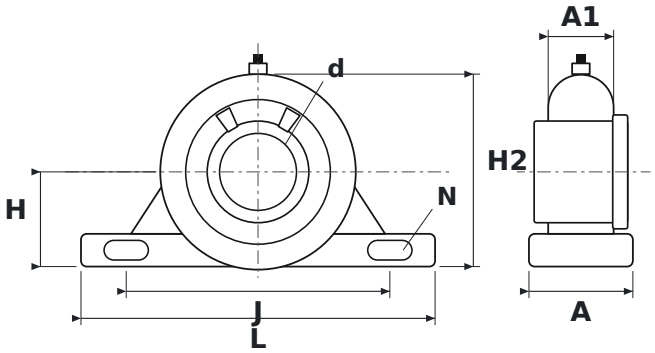

DIMENSIONS

d	shaft diameter	**40 mm**
L	housing length	**184 mm**
H	shaft centre height	**49.2 mm**
H2	total height	**100 mm**
J	bolt hole spacing	**137 mm**
N	bolt hole diameter	**17 mm**
A	housing width	**54 mm**
A1	upper housing width (at the bearing)	**34 mm**

SPECIFICATIONS

Manufacturer	**KOYO**
Manufacturer designation	**UCP208 J**
Rolling elements	**single-row ball bearing**