# Bearing unit UCP208 SNR

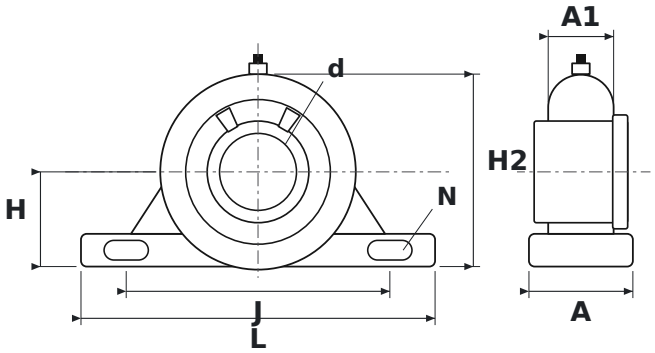


## DIMENSIONS

| | | |
|---|---|---|
| **d** | shaft diameter | **40 mm** |
| **L** | housing length | **184 mm** |
| **H** | shaft centre height | **49.2 mm** |
| **H2** | total height | **100 mm** |
| **J** | bolt hole spacing | **137 mm** |
| **N** | bolt hole diameter | **17 mm** |
| **A** | housing width | **54 mm** |
| **A1** | upper housing width (at the bearing) | **34 mm** |

## SPECIFICATIONS

| | |
|---|---|
| Manufacturer | **SNR** |
| Manufacturer designation | **UCP208** |
| Rolling elements | **single-row ball bearing** |
| Mass | **2.145 kg** |