Bearing unit UCP210 NKE

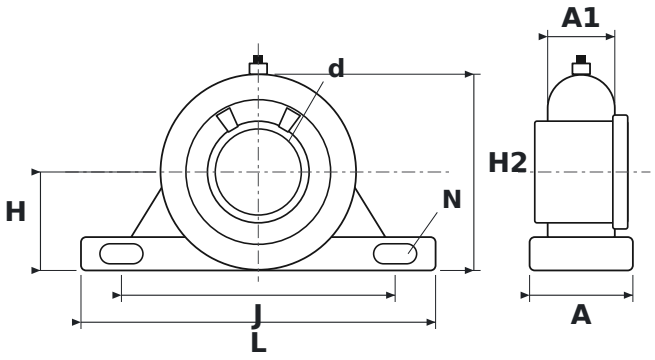

DIMENSIONS

d	shaft diameter	**50 mm**
L	housing length	**206 mm**
H	shaft centre height	**57.2 mm**
H2	total height	**114 mm**
J	bolt hole spacing	**159 mm**
N	bolt hole diameter	**20 mm**
A	housing width	**60 mm**
A1	upper housing width (at the bearing)	**39 mm**

SPECIFICATIONS

Manufacturer	**NKE**
Manufacturer designation	**UCP210**
Rolling elements	**single-row ball bearing**