Bearing unit UCP212 FYH

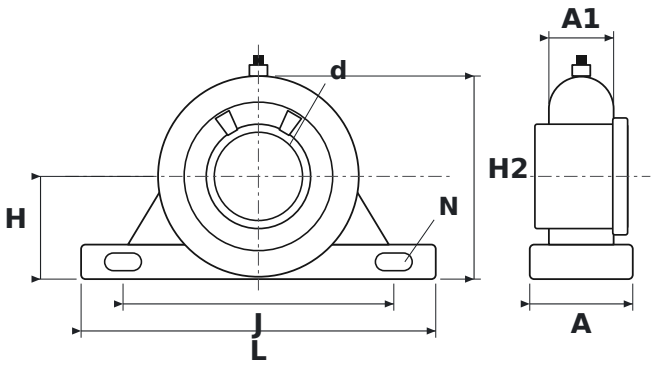

DIMENSIONS

d	shaft diameter	**60 mm**
L	housing length	**241 mm**
H	shaft centre height	**69.8 mm**
H2	total height	**138 mm**
J	bolt hole spacing	**184 mm**
N	bolt hole diameter	**20 mm**
A	housing width	**70 mm**
A1	upper housing width (at the bearing)	**44 mm**

SPECIFICATIONS

Manufacturer	**FYH**
Manufacturer designation	**UCP212**
Rolling elements	**single-row ball bearing**