Bearing unit UCP213 D1 NTN

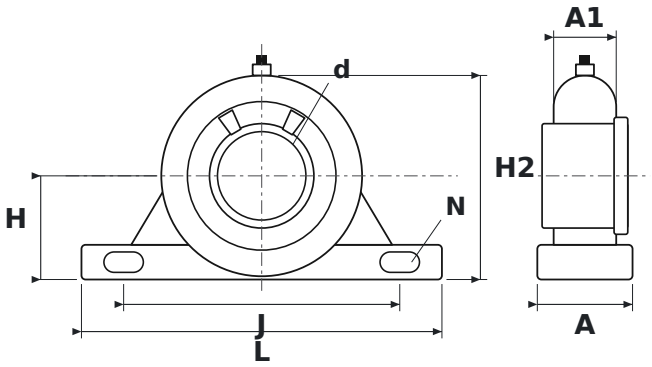

DIMENSIONS

d	shaft diameter	**65 mm**
L	housing length	**265 mm**
H	shaft centre height	**76.2 mm**
H2	total height	**150 mm**
J	bolt hole spacing	**203 mm**
N	bolt hole diameter	**25 mm**
A	housing width	**70 mm**
A1	upper housing width (at the bearing)	**46 mm**

SPECIFICATIONS

Manufacturer	**NTN**
Manufacturer designation	**UCP213 D1**
Rolling elements	**single-row ball bearing**