# Bearing unit UCP213 NKE

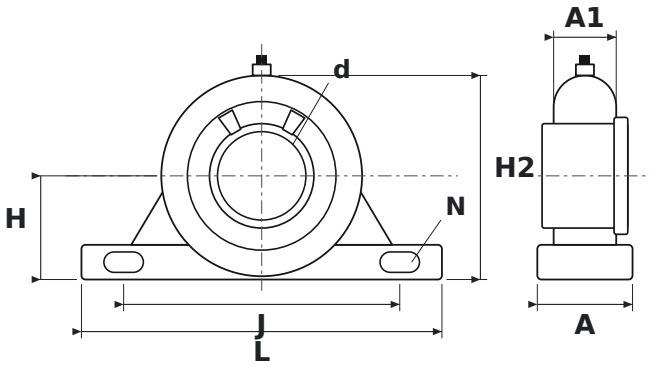


## DIMENSIONS

| | | |
|---|---|---|
| **d** | shaft diameter | **65 mm** |
| **L** | housing length | **265 mm** |
| **H** | shaft centre height | **76.2 mm** |
| **H2** | total height | **150 mm** |
| **J** | bolt hole spacing | **203 mm** |
| **N** | bolt hole diameter | **25 mm** |
| **A** | housing width | **70 mm** |
| **A1** | upper housing width (at the bearing) | **46 mm** |

## SPECIFICATIONS

| | |
|---|---|
| Manufacturer | **NKE** |
| Manufacturer designation | **UCP213** |
| Rolling elements | **single-row ball bearing** |