Bearing unit UCP214 NKE

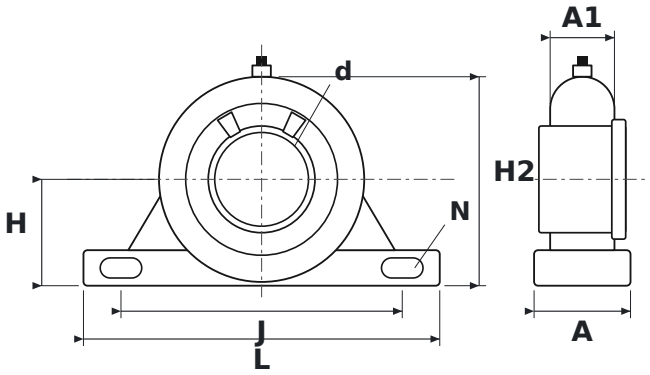

DIMENSIONS

d	shaft diameter	**70 mm**
L	housing length	**266 mm**
H	shaft centre height	**79.4 mm**
H2	total height	**156 mm**
J	bolt hole spacing	**210 mm**
N	bolt hole diameter	**25 mm**
A	housing width	**72 mm**
A1	upper housing width (at the bearing)	**48 mm**

SPECIFICATIONS

Manufacturer	**NKE**
Manufacturer designation	**UCP214**
Rolling elements	**single-row ball bearing**