Bearing unit UCP215 D1 RHP

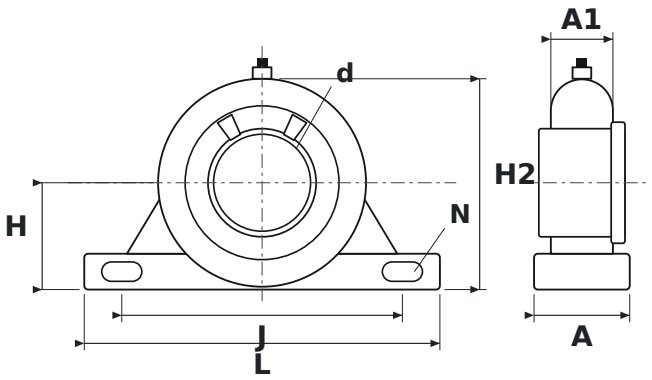

DIMENSIONS

d	shaft diameter	**75 mm**
L	housing length	**275 mm**
H	shaft centre height	**82.6 mm**
H2	total height	**163 mm**
J	bolt hole spacing	**217 mm**
N	bolt hole diameter	**25 mm**
A	housing width	**74 mm**
A1	upper housing width (at the bearing)	**48 mm**

SPECIFICATIONS

Manufacturer	**RHP**
Manufacturer designation	**UCP215 D1**
Rolling elements	**single-row ball bearing**