# Bearing unit UCP217 D1 RHP

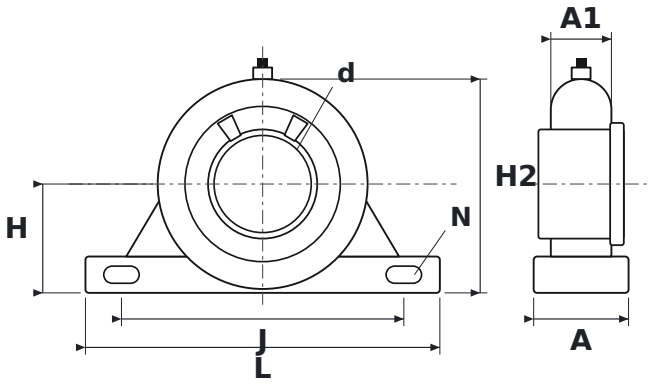


## DIMENSIONS

| | | |
|---|---|---|
| **d** | shaft diameter | **85 mm** |
| **L** | housing length | **310 mm** |
| **H** | shaft centre height | **95.2 mm** |
| **H2** | total height | **187 mm** |
| **J** | bolt hole spacing | **247 mm** |
| **N** | bolt hole diameter | **25 mm** |
| **A** | housing width | **83 mm** |
| **A1** | upper housing width (at the bearing) | **53 mm** |

## SPECIFICATIONS

| | |
|---|---|
| Manufacturer | **RHP** |
| Manufacturer designation | **UCP217 D1** |
| Rolling elements | **single-row ball bearing** |