Bearing unit UCP218 NKE

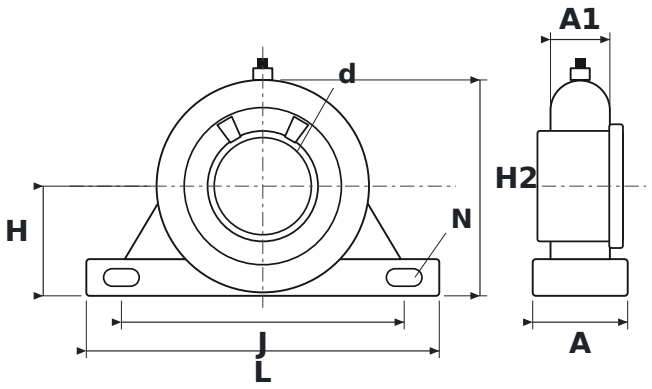

DIMENSIONS

d	shaft diameter	**90 mm**
L	housing length	**327 mm**
H	shaft centre height	**101.6 mm**
H2	total height	**200 mm**
J	bolt hole spacing	**262 mm**
N	bolt hole diameter	**27 mm**
A	housing width	**88 mm**
A1	upper housing width (at the bearing)	**55 mm**

SPECIFICATIONS

Manufacturer	**NKE**
Manufacturer designation	**UCP218**
Rolling elements	**single-row ball bearing**