# Bearing unit UCP307 NSK

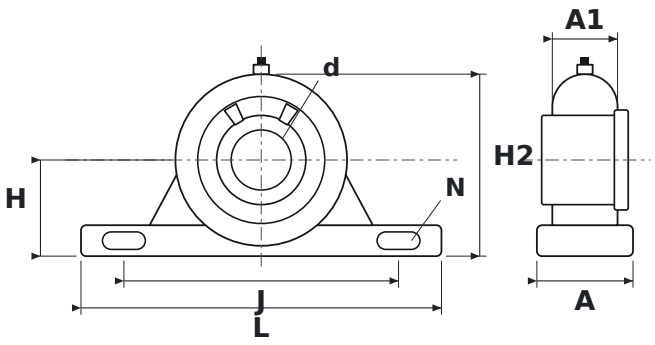


## DIMENSIONS

| | | |
|---|---|---|
| **d** | shaft diameter | **35 mm** |
| **L** | housing length | **210 mm** |
| **H** | shaft centre height | **56 mm** |
| **H2** | total height | **106 mm** |
| **J** | bolt hole spacing | **160 mm** |
| **N** | bolt hole diameter | **17 mm** |
| **A** | housing width | **56 mm** |
| **A1** | upper housing width (at the bearing) | **38 mm** |

## SPECIFICATIONS

| | |
|---|---|
| Manufacturer | **NSK** |
| Manufacturer designation | **UCP307** |
| Rolling elements | **single-row ball bearing** |