Bearing unit UCP307 SKF

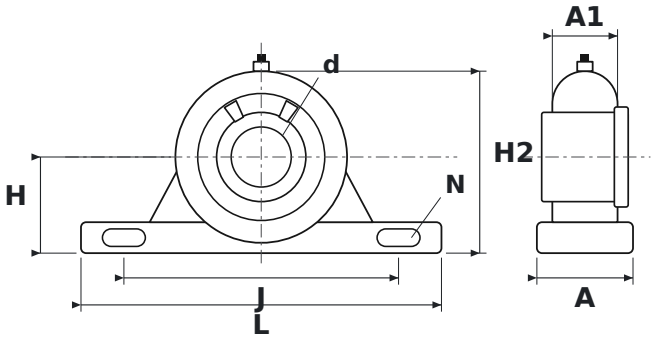

DIMENSIONS

d	shaft diameter	**35 mm**
L	housing length	**210 mm**
H	shaft centre height	**56 mm**
H2	total height	**106 mm**
J	bolt hole spacing	**160 mm**
N	bolt hole diameter	**17 mm**
A	housing width	**56 mm**
A1	upper housing width (at the bearing)	**38 mm**

SPECIFICATIONS

Manufacturer	**SKF**
Manufacturer designation	**UCP307**
Rolling elements	**single-row ball bearing**