Bearing unit UCP308 J KOYO

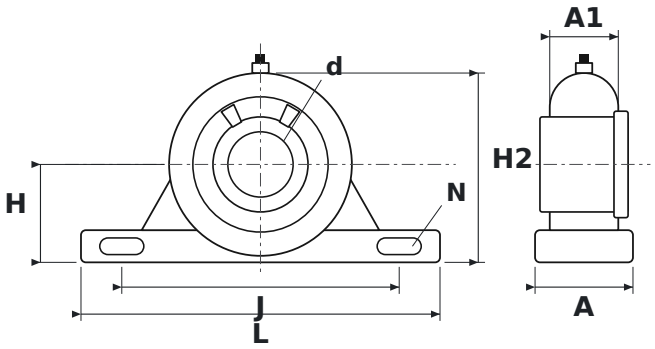

DIMENSIONS

d	shaft diameter	**40 mm**
L	housing length	**220 mm**
H	shaft centre height	**60 mm**
H2	total height	**116 mm**
J	bolt hole spacing	**170 mm**
N	bolt hole diameter	**17 mm**
A	housing width	**60 mm**
A1	upper housing width (at the bearing)	**42 mm**

SPECIFICATIONS

Manufacturer	**KOYO**
Manufacturer designation	**UCP308 J**
Rolling elements	**single-row ball bearing**