Bearing unit UCP310 SKF

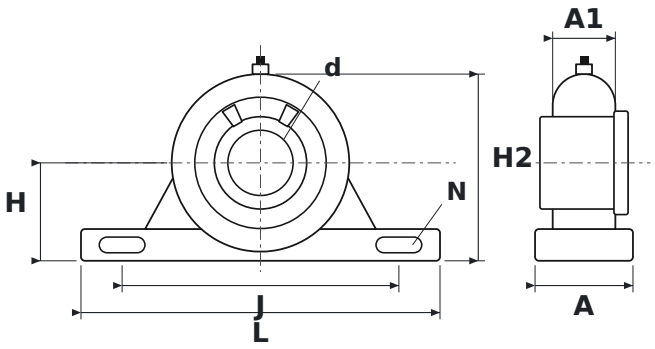

DIMENSIONS

d	shaft diameter	**50 mm**
L	housing length	**275 mm**
H	shaft centre height	**75 mm**
H2	total height	**143 mm**
J	bolt hole spacing	**212 mm**
N	bolt hole diameter	**20 mm**
A	housing width	**75 mm**
A1	upper housing width (at the bearing)	**48 mm**

SPECIFICATIONS

Manufacturer	**SKF**
Manufacturer designation	**UCP310**
Rolling elements	**single-row ball bearing**