Bearing unit UCP311 J KOYO

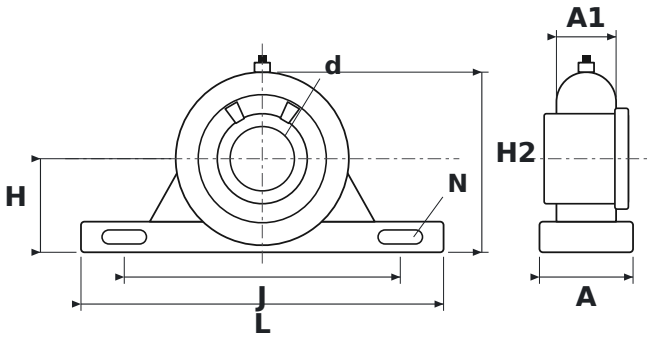

DIMENSIONS

d	shaft diameter	**55 mm**
L	housing length	**310 mm**
H	shaft centre height	**80 mm**
H2	total height	**154 mm**
J	bolt hole spacing	**236 mm**
N	bolt hole diameter	**20 mm**
A	housing width	**80 mm**
A1	upper housing width (at the bearing)	**51 mm**

SPECIFICATIONS

Manufacturer	**KOYO**
Manufacturer designation	**UCP311 J**
Rolling elements	**single-row ball bearing**