Bearing unit UCP316 ZEN

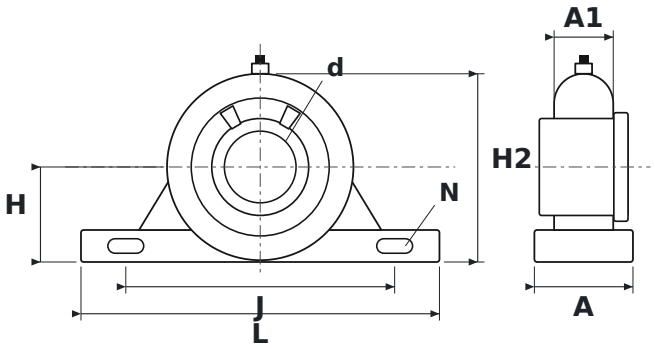

DIMENSIONS

d	shaft diameter	**80 mm**
L	housing length	**400 mm**
H	shaft centre height	**106 mm**
H2	total height	**210 mm**
J	bolt hole spacing	**300 mm**
N	bolt hole diameter	**27 mm**
A	housing width	**110 mm**
A1	upper housing width (at the bearing)	**66 mm**

SPECIFICATIONS

Manufacturer	**ZEN**
Manufacturer designation	**UCP316**
Rolling elements	**single-row ball bearing**