Bearing unit UCP318 SNR

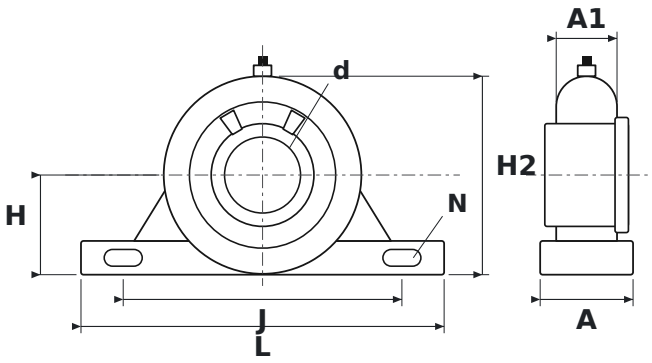

DIMENSIONS

d	shaft diameter	**90 mm**
L	housing length	**430 mm**
H	shaft centre height	**118 mm**
H2	total height	**235 mm**
J	bolt hole spacing	**330 mm**
N	bolt hole diameter	**33 mm**
A	housing width	**110 mm**
A1	upper housing width (at the bearing)	**72 mm**

SPECIFICATIONS

Manufacturer	**SNR**
Manufacturer designation	**UCP318**
Rolling elements	**single-row ball bearing**