Bearing unit UCP320 ZEN

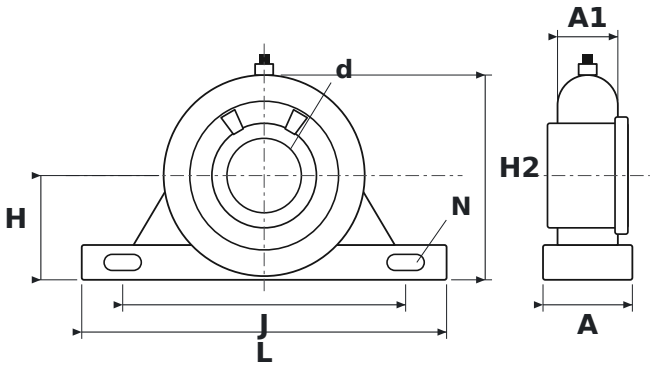

DIMENSIONS

d	shaft diameter	**100 mm**
L	housing length	**490 mm**
H	shaft centre height	**140 mm**
H2	total height	**275 mm**
J	bolt hole spacing	**380 mm**
N	bolt hole diameter	**36 mm**
A	housing width	**120 mm**
A1	upper housing width (at the bearing)	**81 mm**

SPECIFICATIONS

Manufacturer	**ZEN**
Manufacturer designation	**UCP320**
Rolling elements	**single-row ball bearing**