Bearing unit UCP326 D1 NTN

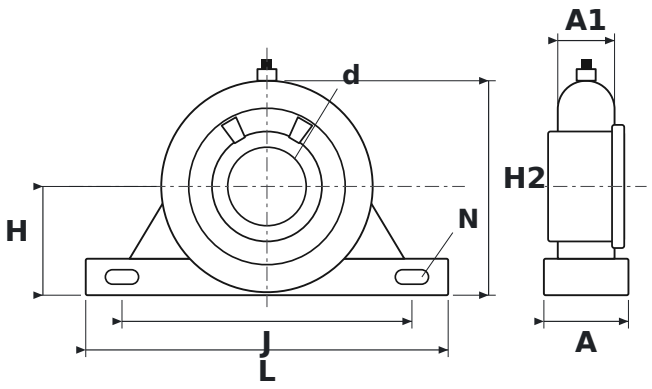

DIMENSIONS

d	shaft diameter	**130 mm**
L	housing length	**600 mm**
H	shaft centre height	**180 mm**
H2	total height	**355 mm**
J	bolt hole spacing	**480 mm**
N	bolt hole diameter	**40 mm**
A	housing width	**140 mm**
A1	upper housing width (at the bearing)	**94 mm**

SPECIFICATIONS

Manufacturer	**NTN**
Manufacturer designation	**UCP326 D1**
Rolling elements	**single-row ball bearing**
Mass	**68.5 kg**