# Bearing unit UCP326 NSK

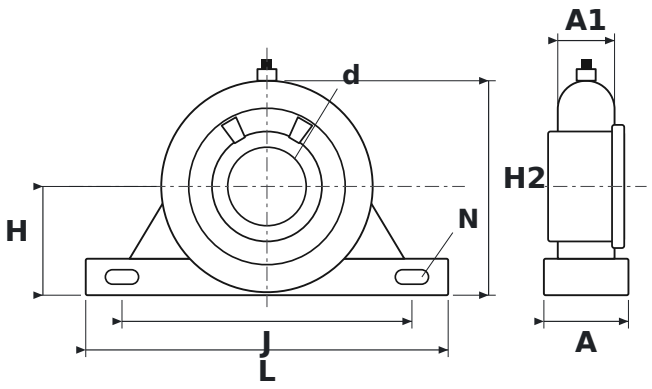


## DIMENSIONS

| | | |
|---|---|---|
| **d** | shaft diameter | **130 mm** |
| **L** | housing length | **600 mm** |
| **H** | shaft centre height | **180 mm** |
| **H2** | total height | **355 mm** |
| **J** | bolt hole spacing | **480 mm** |
| **N** | bolt hole diameter | **40 mm** |
| **A** | housing width | **140 mm** |
| **A1** | upper housing width (at the bearing) | **94 mm** |

## SPECIFICATIONS

| | |
|---|---|
| Manufacturer | **NSK** |
| Manufacturer designation | **UCP326** |
| Rolling elements | **single-row ball bearing** |
| Mass | **68 kg** |