Bearing unit UCP328 D1 NTN

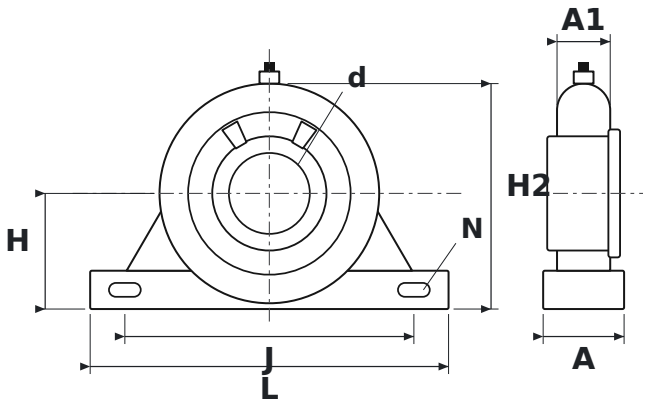

DIMENSIONS

d	shaft diameter	**140 mm**
L	housing length	**620 mm**
H	shaft centre height	**200 mm**
H2	total height	**390 mm**
J	bolt hole spacing	**500 mm**
N	bolt hole diameter	**40 mm**
A	housing width	**140 mm**
A1	upper housing width (at the bearing)	**92 mm**

SPECIFICATIONS

Manufacturer	**NTN**
Manufacturer designation	**UCP328 D1**
Rolling elements	**single-row ball bearing**
Mass	**84.3 kg**