Bearing unit UCPA204-J7 FAG

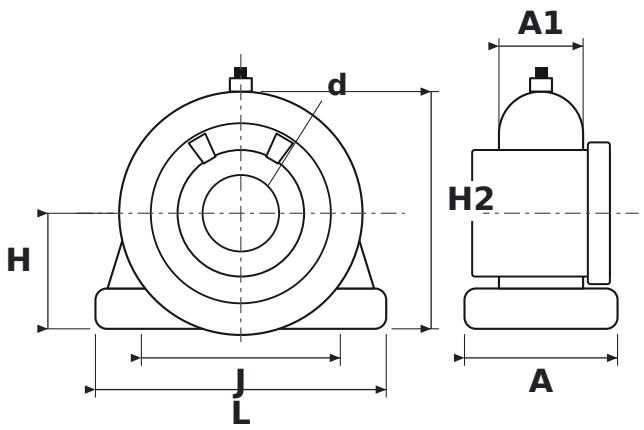

DIMENSIONS

d	shaft diameter	**20 mm**
L	housing length	**76 mm**
H	shaft centre height	**30.2 mm**
H2	total height	**62 mm**
J	bolt hole spacing	**52 mm**
A	housing width	**40 mm**
A1	upper housing width (at the bearing)	**22 mm**

SPECIFICATIONS

Manufacturer	**FAG**
Manufacturer designation	**UCPA204-J7**
Rolling elements	**single-row ball bearing**