Bearing unit UCPA207-20 FYH

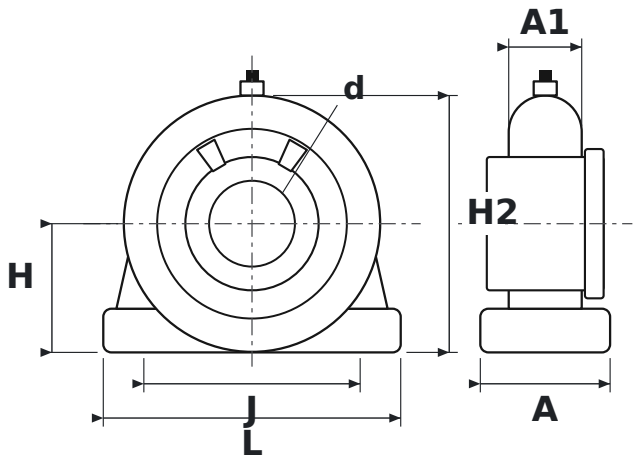

DIMENSIONS

d	shaft diameter	**31.75 mm**
L	housing length	**110 mm**
H	shaft centre height	**47.6 mm**
H2	total height	**95 mm**
J	bolt hole spacing	**80 mm**
A	housing width	**48 mm**
A1	upper housing width (at the bearing)	**27 mm**

SPECIFICATIONS

Manufacturer	**FYH**
Manufacturer designation	**UCPA207-20**
Rolling elements	**single-row ball bearing**