Bearing unit UCPA208 NKE

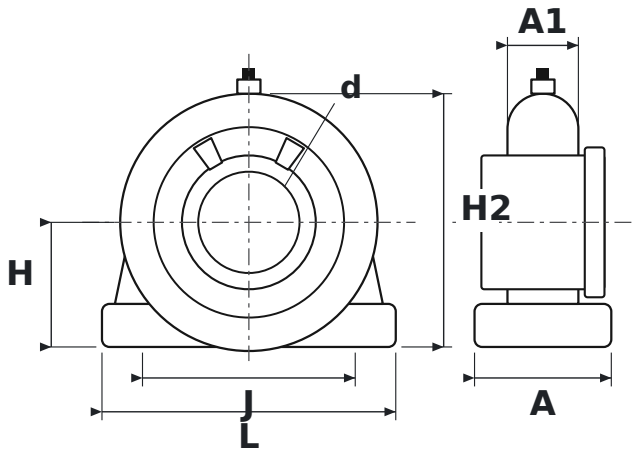

DIMENSIONS

d	shaft diameter	**40 mm**
L	housing length	**116 mm**
H	shaft centre height	**49.2 mm**
H2	total height	**100 mm**
J	bolt hole spacing	**84 mm**
A	housing width	**54 mm**
A1	upper housing width (at the bearing)	**28 mm**

SPECIFICATIONS

Manufacturer	**NKE**
Manufacturer designation	**UCPA208**
Rolling elements	**single-row ball bearing**