Bearing unit UCPA209 NKE

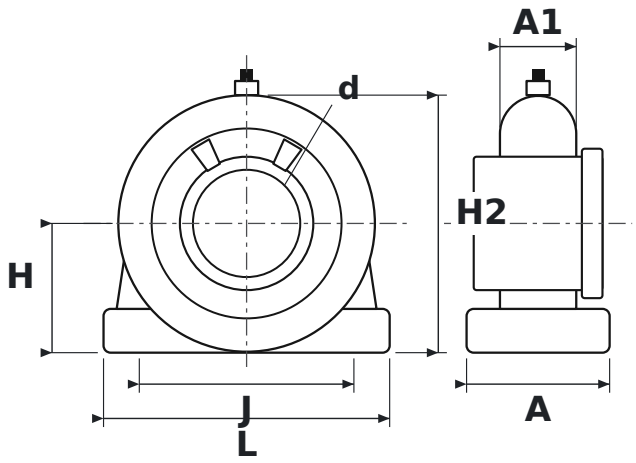

DIMENSIONS

d	shaft diameter	**45 mm**
L	housing length	**120 mm**
H	shaft centre height	**54.2 mm**
H2	total height	**108 mm**
J	bolt hole spacing	**90 mm**
A	housing width	**60 mm**
A1	upper housing width (at the bearing)	**32 mm**

SPECIFICATIONS

Manufacturer	**NKE**
Manufacturer designation	**UCPA209**
Rolling elements	**single-row ball bearing**