Bearing unit UCPA211 SNR

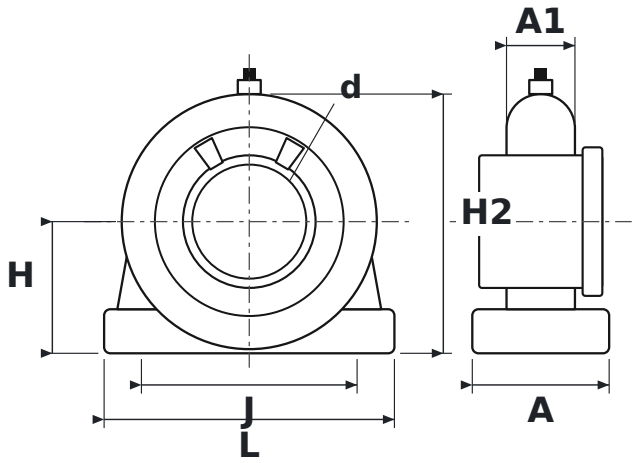

DIMENSIONS

d	shaft diameter	**55 mm**
L	housing length	**140 mm**
H	shaft centre height	**63.5 mm**
H2	total height	**125 mm**
J	bolt hole spacing	**104 mm**
A	housing width	**66 mm**
A1	upper housing width (at the bearing)	**33 mm**

SPECIFICATIONS

Manufacturer	**SNR**
Manufacturer designation	**UCPA211**
Rolling elements	**single-row ball bearing**