Bearing unit UCPH201 FYH

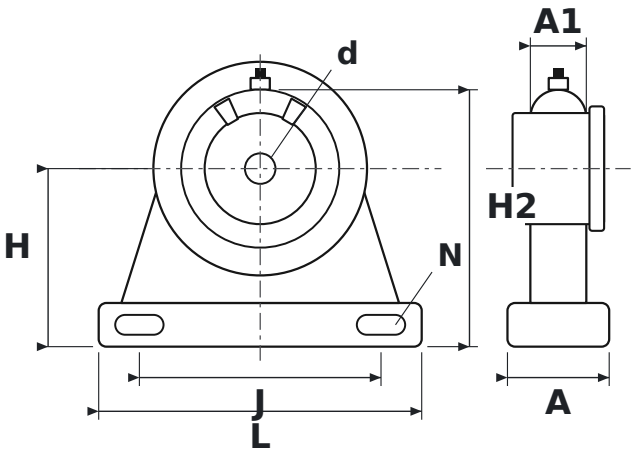

DIMENSIONS

d	shaft diameter	**12 mm**
L	housing length	**127 mm**
H	shaft centre height	**70 mm**
H2	total height	**101 mm**
J	bolt hole spacing	**95 mm**
N	bolt hole diameter	**13 mm**
A	housing width	**40 mm**
A1	upper housing width (at the bearing)	**22 mm**

SPECIFICATIONS

Manufacturer	**FYH**
Manufacturer designation	**UCPH201**
Rolling elements	**single-row ball bearing**