Bearing unit UCPH207 SNR

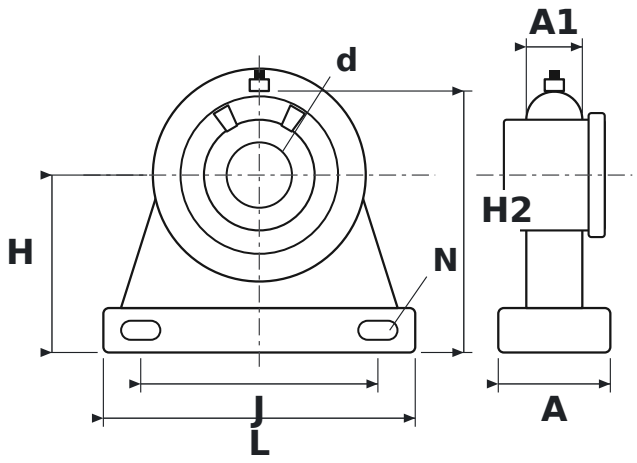

DIMENSIONS

d	shaft diameter	**35 mm**
L	housing length	**167 mm**
H	shaft centre height	**95 mm**
H2	total height	**140 mm**
J	bolt hole spacing	**127 mm**
N	bolt hole diameter	**17 mm**
A	housing width	**60 mm**
A1	upper housing width (at the bearing)	**30 mm**

SPECIFICATIONS

Manufacturer	**SNR**
Manufacturer designation	**UCPH207**
Rolling elements	**single-row ball bearing**
Mass	**2.31 kg**