Bearing unit UCSP209 H1S6 FYH

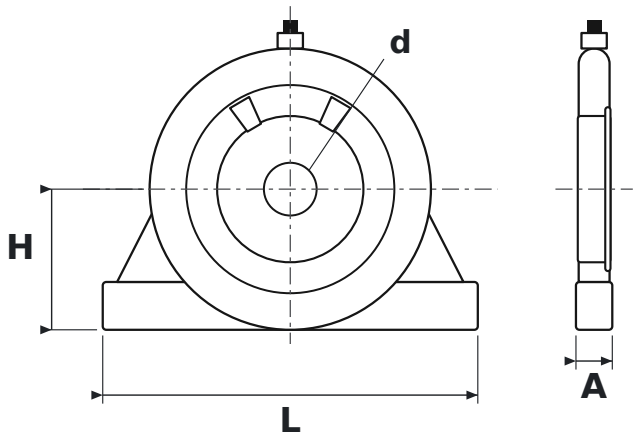

DIMENSIONS

d	shaft diameter	**45 mm**
L	housing length	**320 mm**
H	shaft centre height	**120 mm**
A	housing width	**31 mm**

SPECIFICATIONS

Manufacturer	**FYH**
Manufacturer designation	**UCSP209 H1S6**
Rolling elements	**single-row ball bearing**