Bearing unit UCT201 SNR

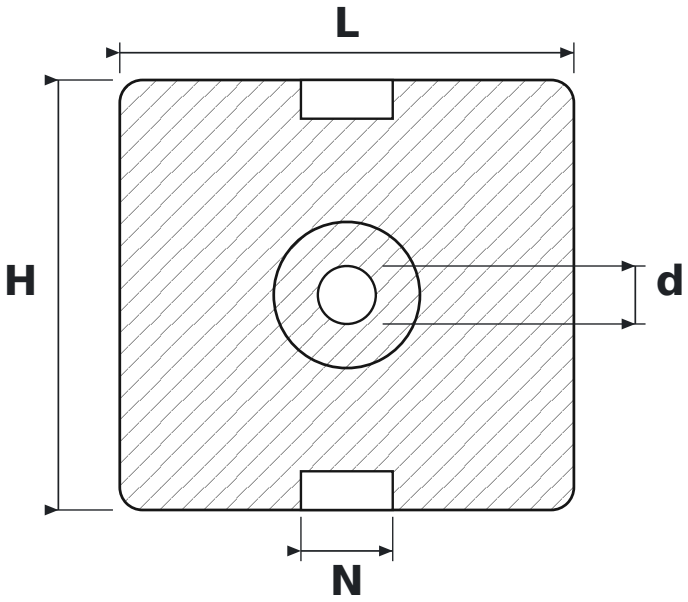

DIMENSIONS

d	shaft diameter	**12 mm**
L	housing length	**94 mm**
H	housing height	**89 mm**
N	guide slot width	**19 mm**

SPECIFICATIONS

Manufacturer	**SNR**
Manufacturer designation	**UCT201**
Rolling elements	**single-row ball bearing**
Mass	**0.818 kg**